Pº ttker Auszugsysteme GmbH, Ostenfeldmark 3, 59557 Lippstadt, Tel: +49(0) 29 41 - 20 95 00, Fax: +49(0) 29 41 - 7 78 57, Email: info@poettker.com

All property rights and rights to exploitation of copyright for this drawing data remain ours; they may not be made available to third parties without our consent.

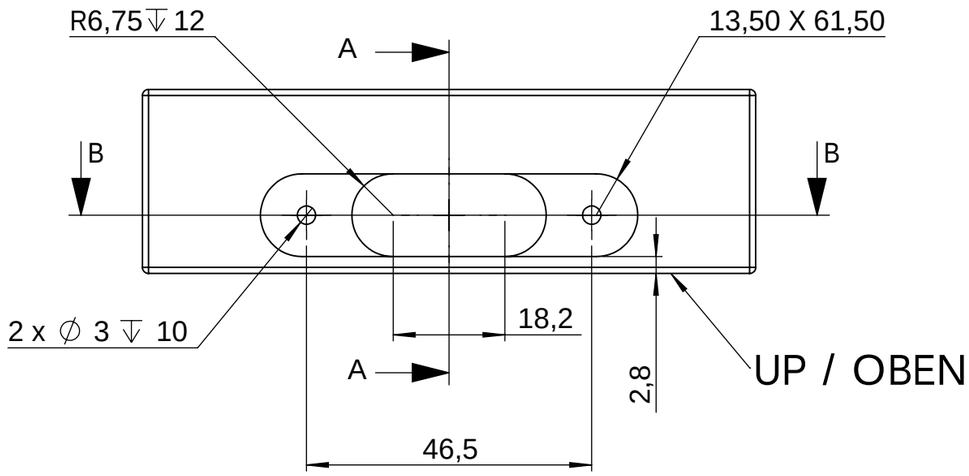

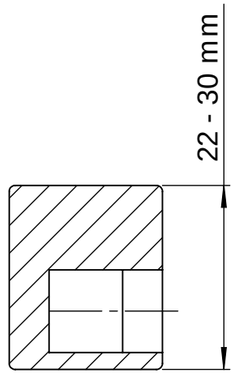

SCHNITT A-A

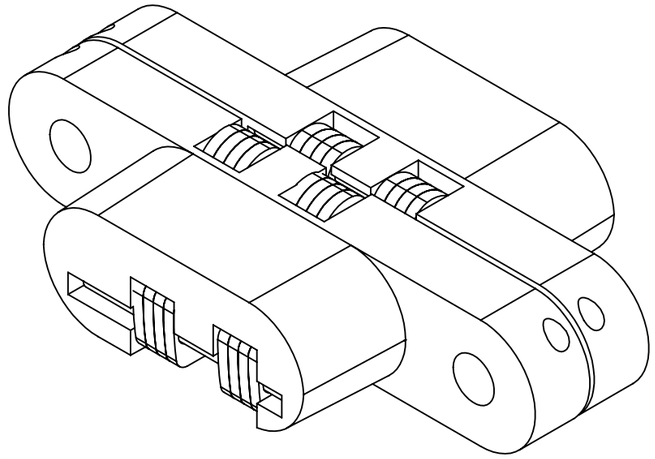

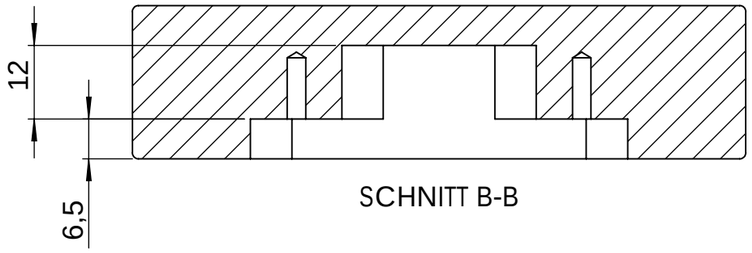

SCHNITT B-B

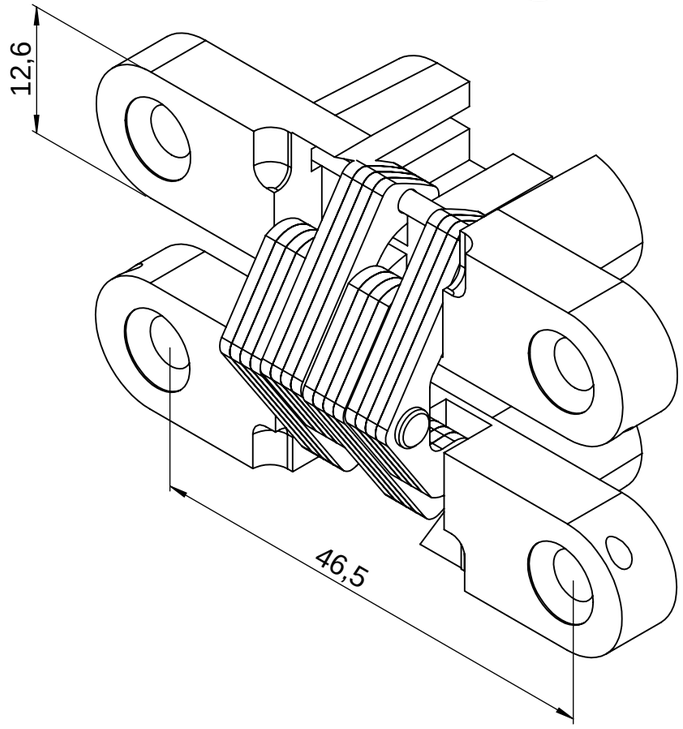

Index	Change	Date	Name

DIN ISO 128-30

Description: Frª sschablone f¿r Scharnier 15853

Surface: | Material: | Weight: kg

	Name	Date	Company
Signed	D.Carrera	04.02.2015	
Tested			Second Company:

General tolerance: DIN ISO 2768 -1 | Item No: **2015-032-006** | Scale 1:1 | Page 1/1 | **A3**

J:\Administrativer Zeichnungsordner\HP & Katalog\Zubehºr\180Á Scharnier\180Á Scharnier 2, 12,6 x 60,7mm (15853)\